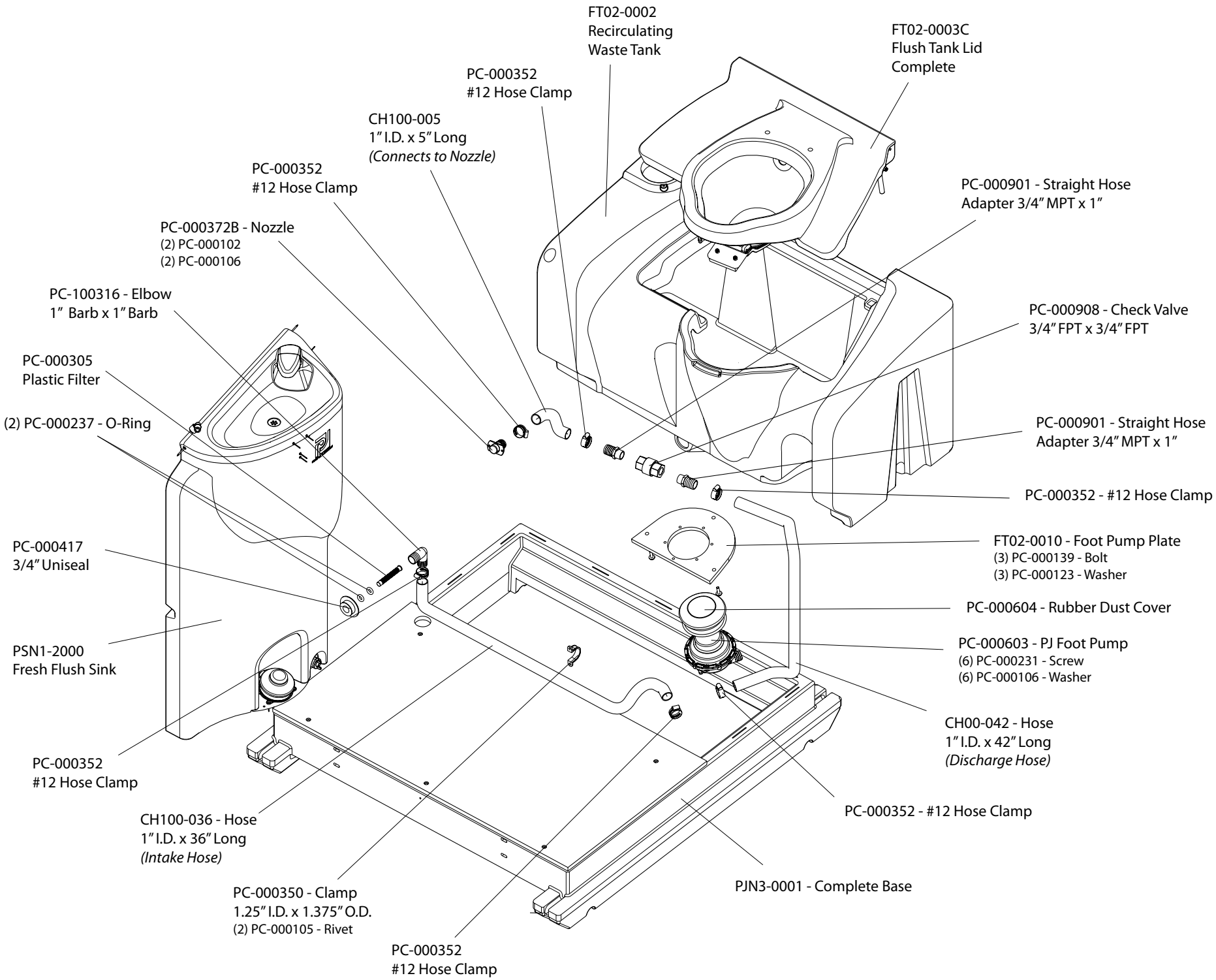
FT02-0002
Recirculating
Waste Tank
FT02-0003C
Flush Tank Lid
Complete
PC-000352
#12 Hose Clamp
CH100-005
1" I.D. x 5" Long
(Connects to Nozzle)
PC-000352
#12 Hose Clamp
PC-000901 - Straight Hose
Adapter 3/4" MPT x 1"
PC-000372B - Nozzle
(2) PC-000102
(2) PC-000106
PC-100316 - Elbow
1" Barb x 1" Barb
PC-000908 - Check Valve
3/4" FPT x 3/4" FPT
PC-000305
Plastic Filter
(2) PC-000237 - O-Ring
PC-000901 - Straight Hose
Adapter 3/4" MPT x 1"
PC-000352 - #12 Hose Clamp
FT02-0010 - Foot Pump Plate
(3) PC-000139 - Bolt
(3) PC-000123 - Washer
PC-000417
3/4" Uniseal
PC-000604 - Rubber Dust Cover
PSN1-2000
Fresh Flush Sink
PC-000603 - PJ Foot Pump
(6) PC-000231 - Screw
(6) PC-000106 - Washer
CH00-042 - Hose
1" I.D. x 42" Long
(Discharge Hose)
PC-000352
#12 Hose Clamp
PC-000352 - #12 Hose Clamp
CH100-036 - Hose
1" I.D. x 36" Long
(Intake Hose)
PJN3-0001 - Complete Base
PC-000350 - Clamp
1.25" I.D. x 1.375" O.D.
(2) PC-000105 - Rivet
PC-000352
#12 Hose Clamp