Exploded View

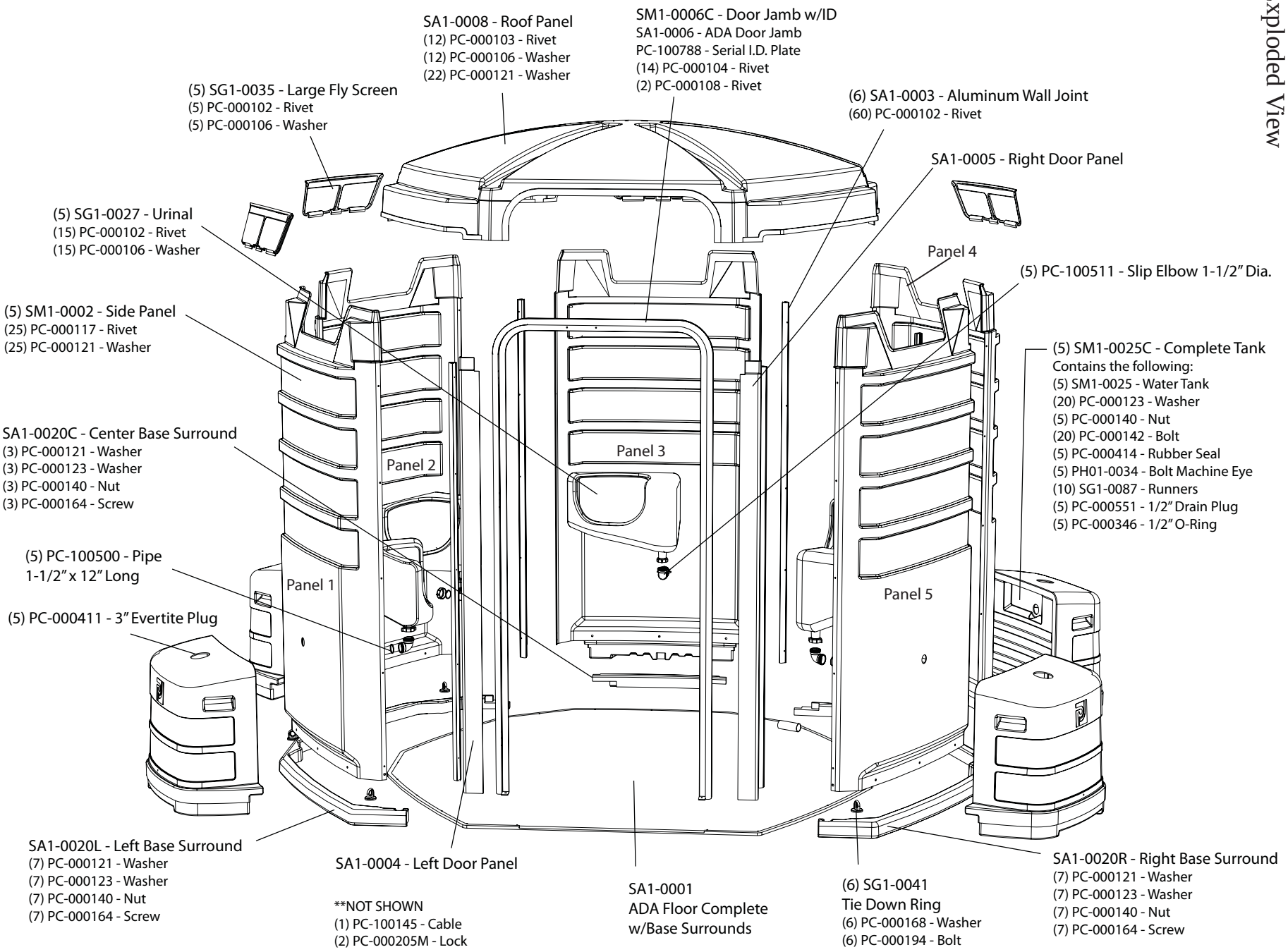
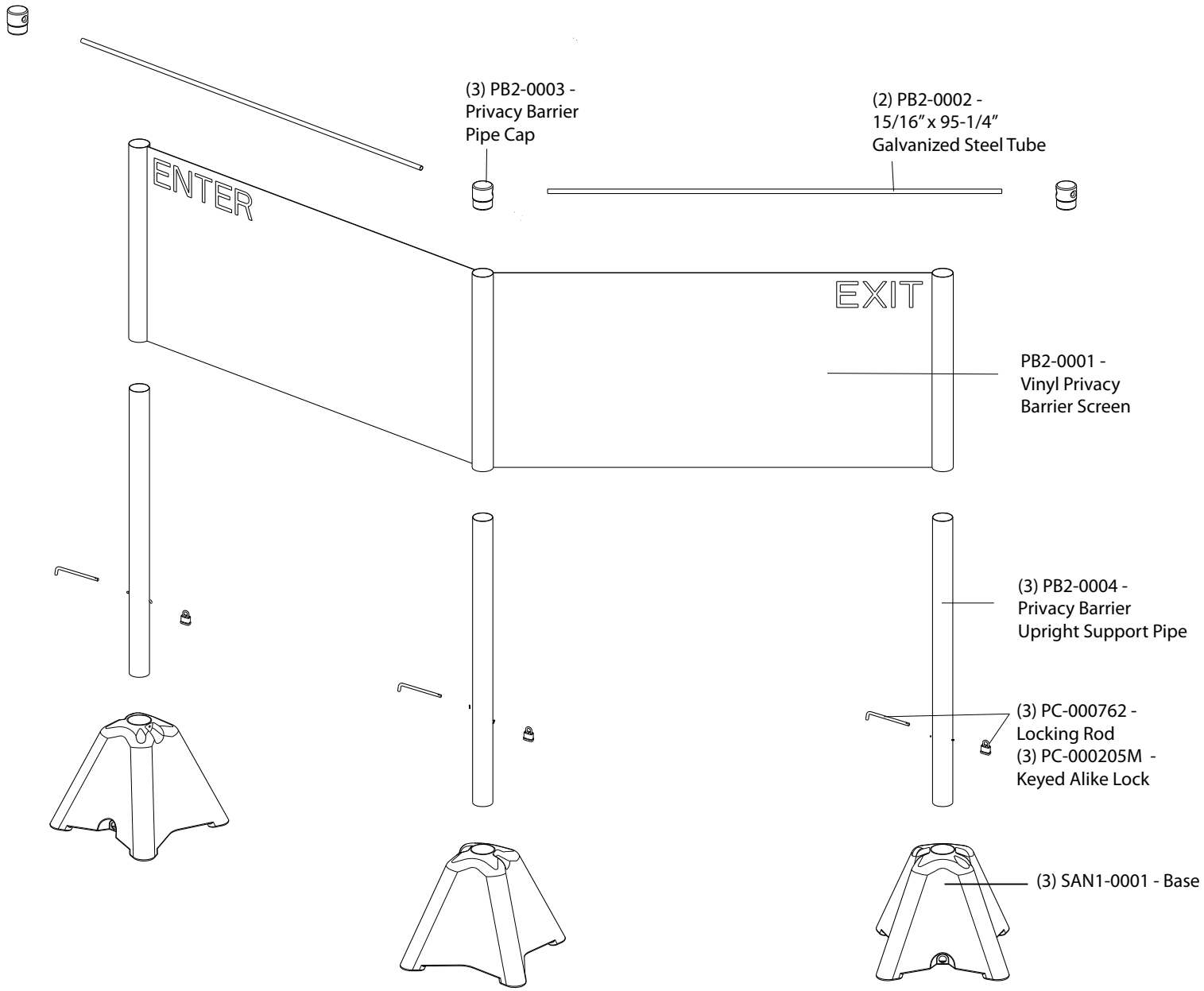
Exploded View of Privacy Barrier