Bravo Sink - BRA1-1000/2000 (cold/heated)

Updated Aug 24, 2017

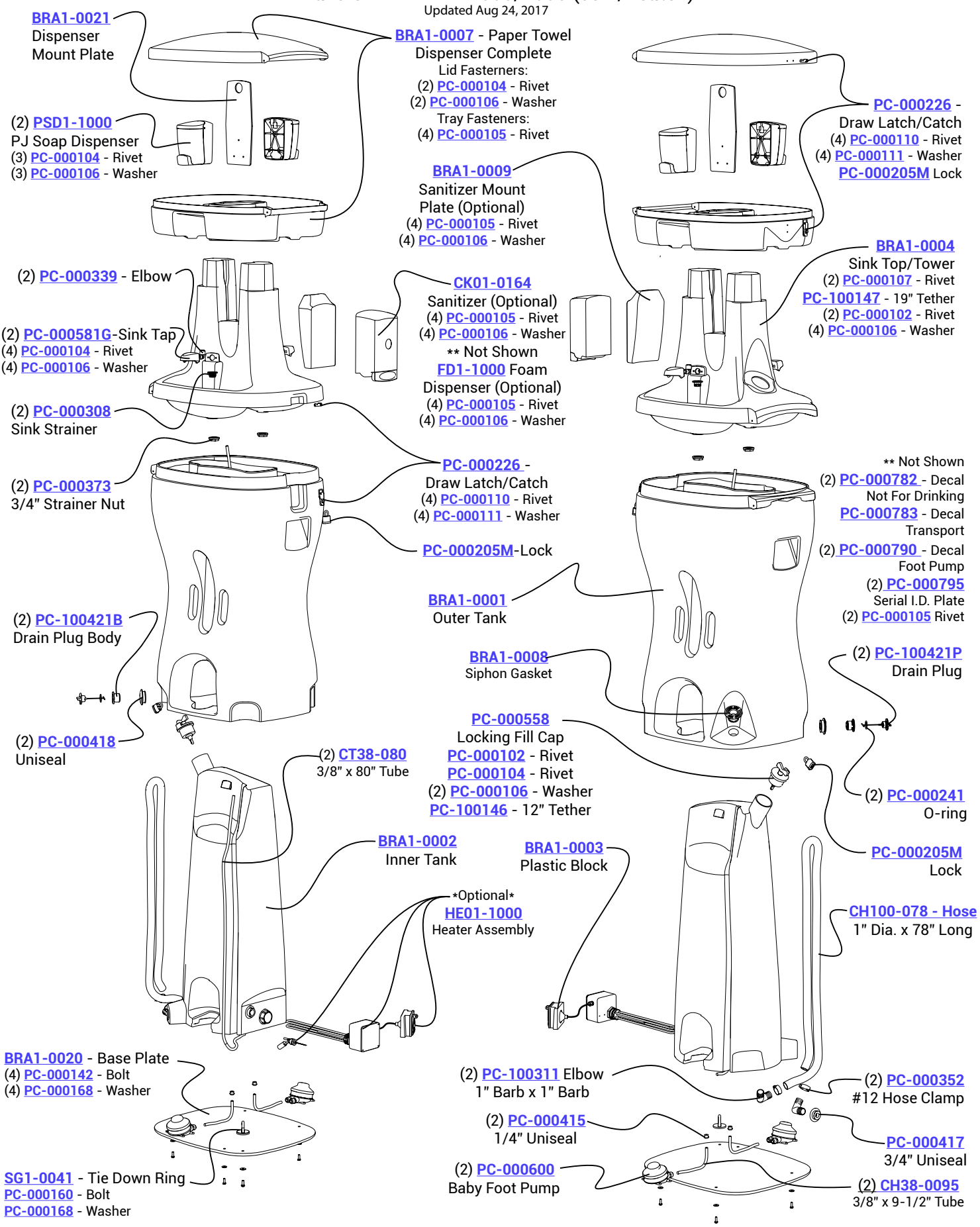

HE01-1000 Heating Element Assembly Parts

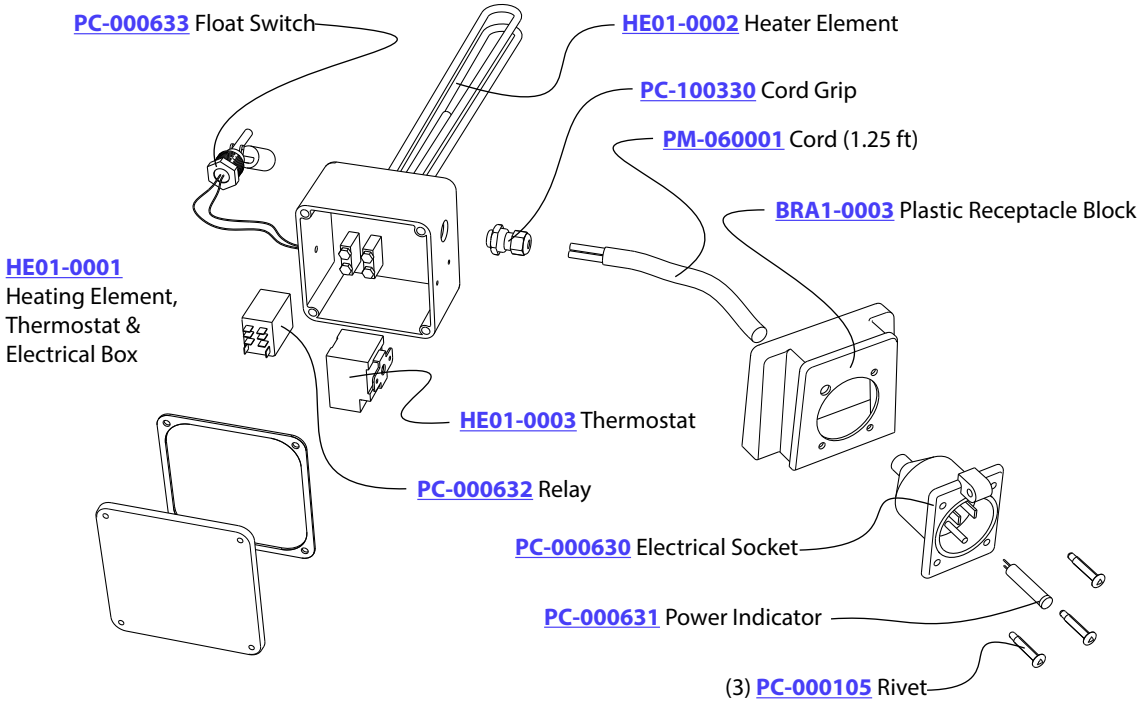
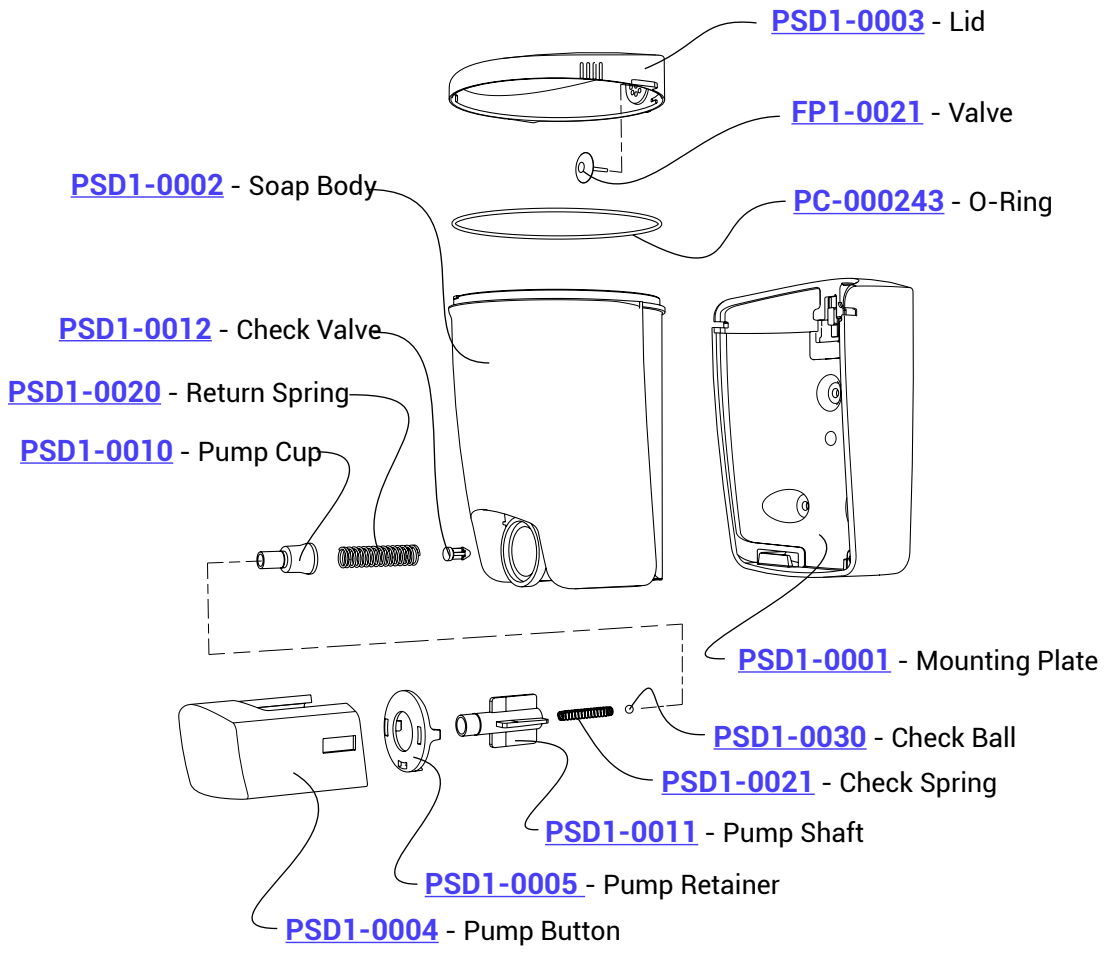
PSD1-1000 - PARTS DIAGRAM